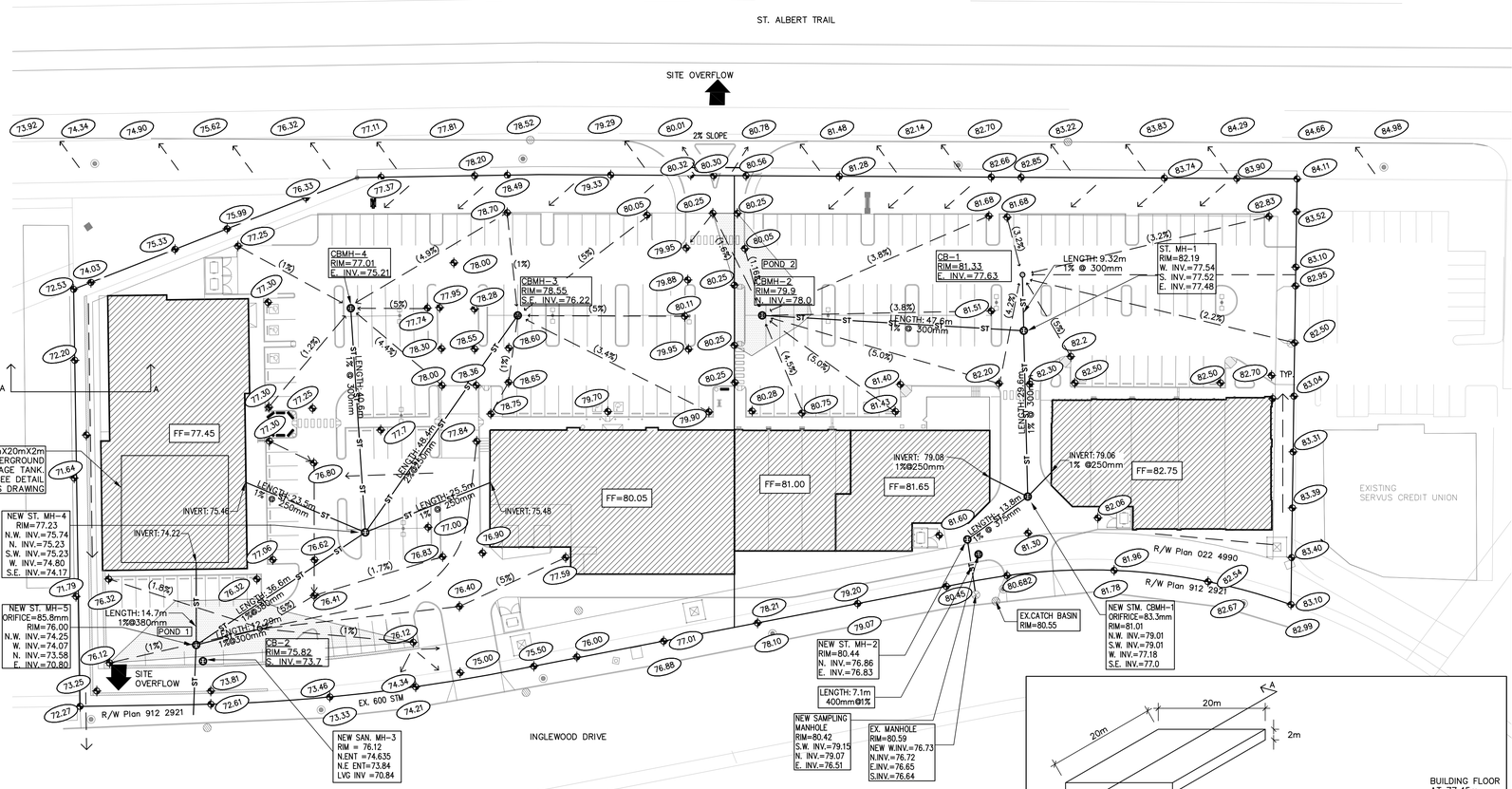

NORTH

SITE GRADE PLAN

SCALE: 1:500(METRIC)

0 5m 15m 25m
1m 10m 20m

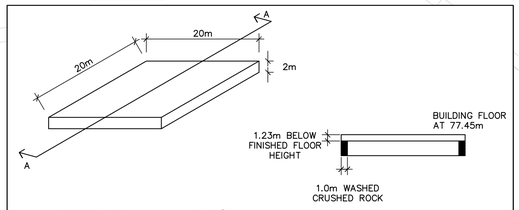

TANK VOLUME 800m^3

TANK WILL CONSIST OF 95% WATER

TOTAL STORAGE 760m^3

SECTION A–A

SCALE: NTS

UNDERGROUND STORAGE TANK DETAIL

SCALE: N.T.S.

ORIFICE CALCULATIONS

Q–PHASE ONE (SOUTH) = 38.6 L/S

Q=0.0386 m^3
g=9.81 m/s^2
h=5.37 m

A = Q/(0.65* sqrt(2*g*h))
A = 0.0386/6.67
A = 5786 mm^2 => 85.8 mm ø ORIFICE

ORIFICE CALCULATIONS

Q–PHASE TWO (NORTH) = 28.3 L/S

Q=0.0283 m^3
g=9.81 m/s^2
h=3.25 m

A = Q/(0.65* sqrt(2*g*h))
A = 0.0283/5.19
A = 5452 mm^2 => 83.3 mm ø ORIFICE

STORM WATER REQUIREMENTS PHASE ONE (SOUTH AREA)

Q = A * RI * ROF
A = 11016 m²
RI = (BASED ON 1:25 YEAR RAIN IDF CURVE FOR EDMONTON)

STORAGE REQUIRED = 637.16 m³ (3.4Hr)
OUTFLOW = 38.6 L/S

STORM WATER REQUIREMENTS PHASE TWO (NORTH AREA)

Q = A * RI * ROF
A = 8084 m²
RI = (BASED ON 1:25 YEAR RAIN IDF CURVE FOR EDMONTON)

STORAGE REQUIRED = 464.47 m³ (3.4Hr)
OUTFLOW = 28.3 L/S

SITE WITH ROOFTOP STORAGE

	PHASE ONE WITH ROOFTOP STORAGE	PHASE TWO WITH ROOFTOP STORAGE
TOTAL BUILDING AREA (m^2)	2503	1941
ROF	0.95	0.95
EFFECTIVE AREA (m^2)	2378	1844
RELEASE RATE FOR 24 HOUR TOTAL STORAGE TIME (L/s)	7.28	5.65
BUILDING STORAGE REQUIRED (m^3)	207.63	160.97
TOTAL SITE AREA LESS BUILDINGS (m^2)	8513	6143
ROF	0.8	0.79
EFFECTIVE AREA (m^2)	6796.2	4860.1
RELEASE RATE (L/s)	31.32	22.65
SITE STORAGE REQUIRED (m^3)	440.87	312.57
TOTAL ADDITIONAL STORAGE REQUIRED (m^3)	753.44	

PHASE ONE SITE STORAGE

POND STORAGE			
POND	AREA (m^2)	DEPTH (mm)	VOLUME (m^3)
1	359.8	350	41.98
	TOTAL POND STORAGE (m^3):		41.98

PIPE STORAGE			
	DIAMETER (mm)	LENGTH (m)	VOLUME (m^3)
	300	12.29	0.87
	380	37.6	4.26
	250	25.6	1.26
	250	23.76	1.17
	250	49.8	2.44
	300	42.8	3.03
	TOTAL PIPE STORAGE (m^3):		13.03

MANHOLE STORAGE			
NAME	DIAMETER (mm)	WATER DEPTH IN MANHOLE (m)	VOLUME (m^3)
CB–2	900	2.47	1.57
CBMH–3	1200	0	0
CBMH–4	1200	1.37	1.55
MH–4	1200	1.17	1.32
MH–5	1200	5.2	5.88
TOTAL MANHOLE STORAGE (m^3):			10.32
PHASE ONE GRAND TOTAL STORAGE:			65.33

MECHANICAL LEGEND

NATURAL GAS PIPING	—G—
SANITARY DRAINAGE	—SAN—
DOMESTIC COLD WATER	— · · —
KEYNOTE REFERENCE	8
CATCH BASIN	
STORM MANHOLE	
SANITARY MANHOLE	
FIRE HYDRANT	
CURB COCK	
FINISHED FLOOR	FF=66.50
EXISTING GRADE	657.850
EXISTING GRADE	657.850
PROPSED NEW GRADE	657.850
PROPOSED DESIGN GRADE DRAINAGE C/W SITE SURFACE SLOPE	(1.5%)

GAS COMPANY INFORMATION

EQUIPMENT	INPUT (MBTUH)
–	–
–	–
TO BE DETERMINED WITH TENANT	
TOTAL	–

Prior to commencing installation within the building, the Mechanical Contractor shall check the location and elevations lines including sanitary, storm sewer, water to ensure that the services can be installed as shown. Also check the location of the electrical, telephone and cable system to ensure no conflict. Contractor to coordinate with gas company the exact location for the gas meter.

PHASE TWO SITE STORAGE

POND STORAGE			
POND	AREA (m^2)	DEPTH (mm)	VOLUME (m^3)
2	253.8	350	29.61
	TOTAL POND STORAGE (m^3):		29.61

PIPE STORAGE			
	DIAMETER (mm)	LENGTH (m)	VOLUME (m^3)
	250	7.1	0.35
	250	5.5	0.27
	300	26.3	1.86
	300	13.3	0.94
	300	50.71	3.58
	TOTAL PIPE STORAGE (m^3):		7.0

MANHOLE STORAGE			
NAME	DIAMETER (mm)	WATER DEPTH IN MANHOLE (m)	VOLUME (m^3)
CB–1	900	2.6	1.65
CBMH–1	1200	3.25	3.68
CBMH–2	1200	2.25	2.54
MH–1	1200	2.81	3.18
TOTAL MANHOLE STORAGE (m^3):			11.05
PHASE TWO GRAND TOTAL STORAGE:			47.66

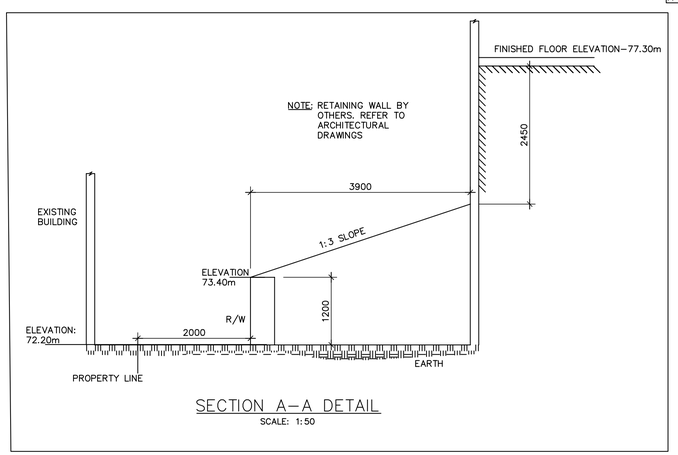

SECTION A–A DETAIL

SCALE: 1:50

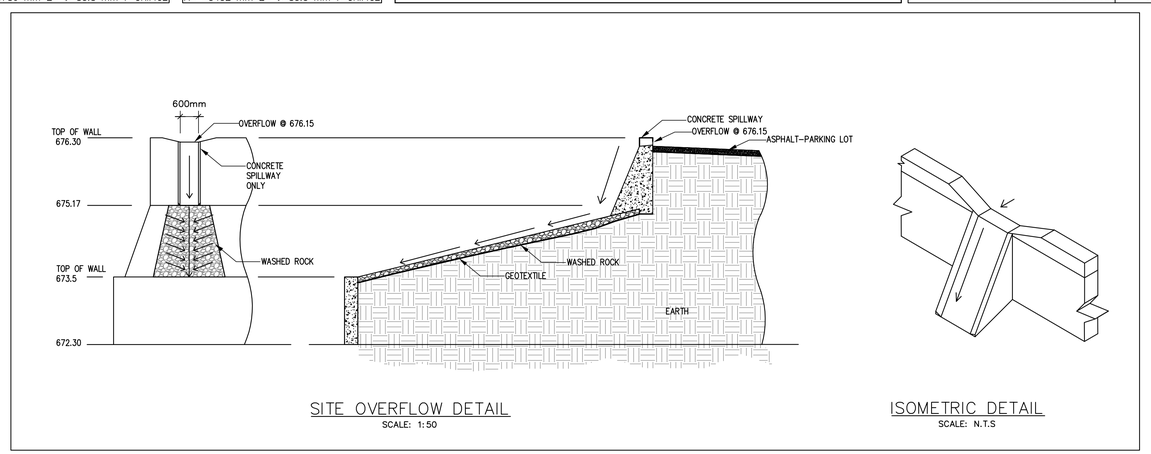

SITE OVERFLOW DETAIL

SCALE: 1:50

ISOMETRIC DETAIL

SCALE: N.T.S

GENERAL NOTES:

1. SIZE OF CATCH BASIN LEAD IS 250mm.
2. MAXIMUM DISTANCE CATCH BASIN LEAD IS 30 METERS.
3. MAXIMUM DISTANCE BETWEEN MANHOLES IS 150 METERS.
4. MINIMUM SLOPE OF CATCH BASIN LEAD AND OTHER PIPING ARE 1.0%.
5. SURFACE WATER SHOULD NOT BE PERMITTED TO RUN A DISTANCE GREATER THAN 120m WITHOUT INTERCEPTION BY A CATCH BASIN.
6. COVERAGE 2.2m.
7. BERM SLOPE LESS OR EQUAL TO 3.5:1.
8. SURFACE SLOPE 1% MIN. TO 5% MAX.
9. ALL ELEVATIONS ARE IN GEODETIC: IE. 77.50 = 677.50m GEODETIC
10. ALL ELEVATIONS ARE TOP OF ASPHALT, UNLESS NOTED.
11. ALL STORM PIPING TO BE PVC SDR35 ULTRA RIB UNLESS NOTED.
12. ALL SANITARY LINES TO BE PVC SDR35, UNLESS NOTED.
13. ALL DOMESTIC WATER TO BE PRESSURE RATED PVC C900, UNLESS NOTED.
14. MANHOLE COVER & FRAME TO BE EQUIVALENT TO NORWOOD FOUNDRY MODEL: NF49HD
    CATCHBASIN COVER & FRAME TO BE QUIVALENT TO NORWOOD FOUNDRY MODEL: NF38HD
15. TOWN OF ST. ALBERT WILL ACCEPT UP TO 8% SLOPE MAXIMUM ON ENTRANCE TO SITE. INFORMATION ONLY.
16. ALL MANHOLES AND CATCH BASINS TO BE GROUTED INSIDE AND OUTSIDE FOR THE FULL CIRCUMFERENCE AT ALL JOINT LOCATIONS WITH A NON–SHRINK GROUT

TWS Engineering Ltd.
9918 - 75 AVENUE
EDMONTON, AB. T6E 1J2
Phone: (780) 468-5477
Fax: (780) 465-5368
office@twsengineering.com
www.twsengineering.com

PLHM - W 06983

NO.	DATE	REVISIONS
13	OCT 09/12	ISSUED FOR TENDER
12	SEP 27/12	REVISED FOR CITY OF ST. ALBERT
11	SEP 24/12	ISSUED FOR CONSTRUCTION
10	AUG 16/12	REVISED ENTRANCE–FOR REVIEW
09	JULY 26/12	REVISED ENTRANCE
08	JULY 11/12	REISSUED FOR CITY REVIEW
07	JULY 10/12	FOR CITY REVIEW
06	JULY 05/12	FOR REVIEW
05	JULY 03/12	FOR REVIEW
04	JUNE 20/12	FOR 90% REVIEW
03	JUNE 18/12	REVISED GRADES(SOUTH FOUNDATION/RETAINING WALL)
02	JUNE 7/12	FOR BUILDING PERMIT
01	JUNE 1/12	FOR REVIEW

SEAL

APPROVED BY	CHECKED BY	DRAWN BY
	L.J.K.	J.C.
SCALE	DATE	
AS SHOWN	OCT 15/12	

PROJECT

ST. ALBERT COMMERCIAL SITE

TITLE

SITE GRADE PLAN

PROJECT NUMBER: 12-1665-001CM

REV 10

DRAWING NUMBER: M1.1

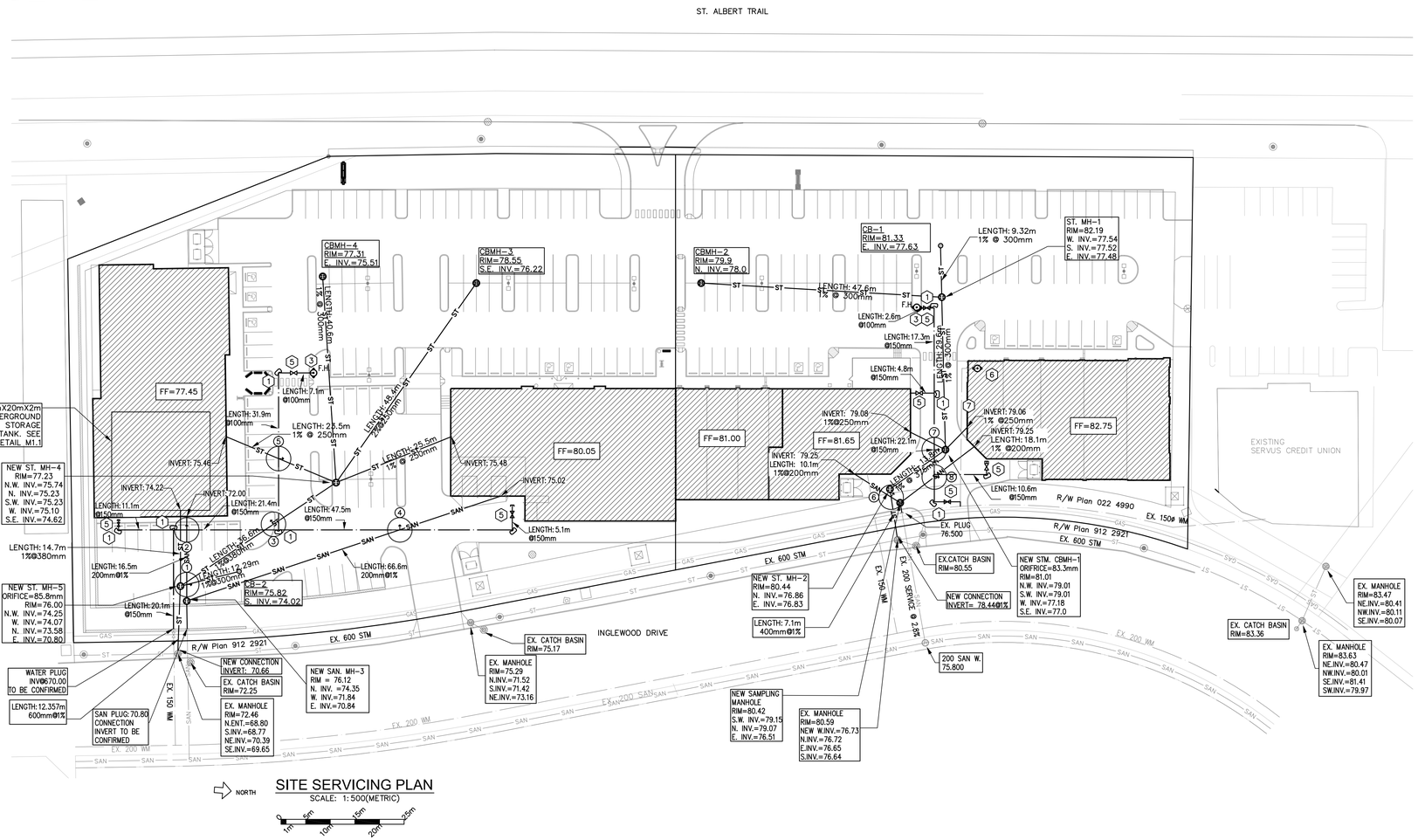

SITE SERVICING PLAN

SCALE: 1:500(METRIC)

1m 5m 10m 15m 20m 25m

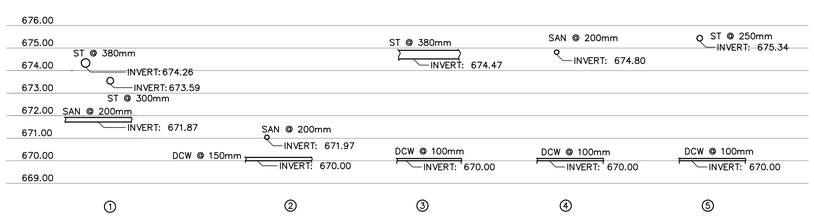

PHASE 1 – PIPE CROSSING

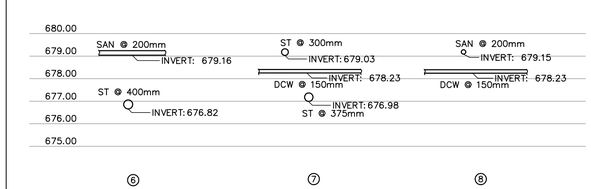

PHASE 2 – PIPE CROSSING

MECHANICAL LEGEND

NATURAL GAS PIPING	—G—
SANITARY DRAINAGE	—SAN—
DOMESTIC COLD WATER	— · — · —
KEYNOTE REFERENCE	8
CATCH BASIN	
STORM MANHOLE	
SANITARY MANHOLE	
FIRE HYDRANT	
CURB COCK	
FINISHED FLOOR	FF=66.50
EXISTING GRADE	
EXISTING GRADE	657.850
PROPSED NEW GRADE	657.850
PROPOSED DESIGN GRADE DRAINAGE C/W SITE SURFACE SLOPE	(1.5%)
PIPE CROSSING MARKER	1

GAS COMPANY INFORMATION

EQUIPMENT	INPUT (MBTUH)
–	–
–	–
TO BE DETERMINED WITH TENANT	
TOTAL	–

Prior to commencing installation within the building, the Mechanical Contractor shall check the location and elevations lines including sanitary, storm sewer, water to ensure that the services can be installed as shown. Also check the location of the electrical, telephone and cable system to ensure no conflict. Contractor to coordinate with gas company the exact location for the gas meter.

KEY NOTES:

1. THRUST BLOCK. SEE DETAIL ON DRAWING M1.3.
2. DOMESTIC WATER PIPING TO BE PVC PRESSURE RATED PIPING (BLUE BRUTE OR EQUAL)
3. FIRE HYDRANT. SEE DETAILS ON DRAWING M1.3.
4. NATURAL GAS SERVICE TO BE CONFIRMED AND COORDINATED BY BUILDING MECHANICAL ENGINEER.
5. CURB COCK. SEE DETAIL ON M1.3
6. EXISTING FIRE HYDRANT TO BE REMOVED AND RELOCATED ON SITE
7. FIRE HYDRANT WATER LINE TO BE REMOVED

GENERAL NOTES:

1. SIZE OF CATCH BASIN LEAD IS 250mm.
2. MAXIMUM DISTANCE CATCH BASIN LEAD IS 30 METERS.
3. MAXIMUM DISTANCE BETWEEN MANHOLES IS 150 METERS.
4. MINIMUM SLOPE OF CATCH BASIN LEAD AND OTHER PIPING ARE 1.0%.
5. SURFACE WATER SHOULD NOT BE PERMITTED TO RUN A DISTANCE GREATER THAN 120m WITHOUT INTERCEPTION BY A CATCH BASIN.
6. COVERAGE 2.2m.
7. BERM SLOPE LESS OR EQUAL TO 3.5:1.
8. SURFACE SLOPE 1% MIN. TO 5% MAX.
9. ALL ELEVATIONS ARE IN GEODETIC: IE. 77.50 = 677.50m GEODETIC
10. ALL ELEVATIONS ARE TOP OF ASPHALT, UNLESS NOTED.
11. ALL STORM PIPING TO BE PVC SDR35 ULTRA RIB UNLESS NOTED.
12. ALL SANITARY LINES TO BE PVC SDR35, UNLESS NOTED.
13. ALL DOMESTIC WATER TO BE PRESSURE RATED PVC C900, UNLESS NOTED.
14. MANHOLE COVER & FRAME TO BE EQUIVALENT TO NORWOOD FOUNDRY MODEL: NF49HD CATCHBASIN COVER & FRAME TO BE QUIVALENT TO NORWOOD FOUNDRY MODEL: NF38HD
15. TOWN OF ST. ALBERT WILL ACCEPT UP TO 8% SLOPE MAXIMUM ON ENTRANCE TO SITE. INFORMATION ONLY.
16. ALL MANHOLES AND CATCH BASINS TO BE GROUTED INSIDE AND OUTSIDE FOR THE FULL CIRCUMFERENCE AT ALL JOINT LOCATIONS WITH A NON-SHRINK GROUT

TWS Engineering Ltd.
9918 - 75 AVENUE EDMONTON, AB. T6E 1J2
Phone: (780) 468-5477 Fax: (780) 465-5368
office@twsengineering.com www.twsengineering.com

PLHM - W 06983

NO.	DATE	REVISIONS
13	OCT 09/12	ISSUED FOR TENDER
12	SEP 27/12	REVISED FOR CITY OF ST. ALBERT
11	SEP 24/12	ISSUED FOR CONSTRUCTION
10	AUG 16/12	REVISED ENTRANCE-FOR REVIEW
09	JULY 26/12	REVISED ENTRANCE
08	JULY 11/12	REISSUED FOR CITY REVIEW
07	JULY 10/12	FOR CITY REVIEW
06	JULY 05/12	FOR REVIEW
05	JULY 03/12	FOR REVIEW
04	JUNE 20/12	FOR 90% REVIEW
03	JUNE 18/12	REVISED GRADES(SOUTH FOUNDATION/RETAINING WALL)
02	JUNE 7/12	FOR BUILDING PERMIT
01	JUNE 1/12	FOR REVIEW

SEAL

APPROVED BY	DRAWN BY	DRAWN
	L.J.K.	J.C.
SCALE	DATE	
AS SHOWN	OCT 15/12	

PROJECT

ST. ALBERT COMMERCIAL SITE

TITLE

SITE SERVICING PLAN

PROJECT NUMBER 12-1665-001CM

REV 10

DRAWING NUMBER M1.2

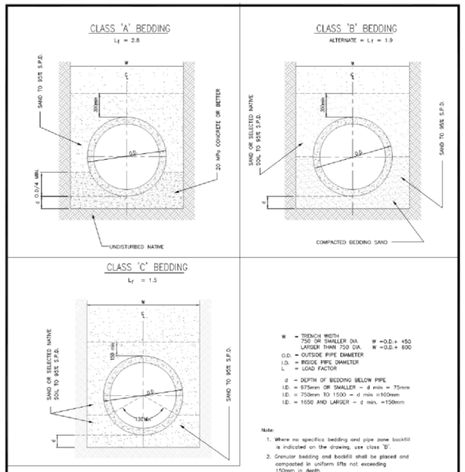

REVISIONS		
Date	Details	Drawn
96/02/24	REVISED DETAILS	DRS
99/04/21	REVISED DETAILS	AL
YY/MM/DD	X	X

THE CITY OF St.Albert — 5 ST. ANNE STREET, ST. ALBERT, Alberta, T8N 3Z9, CANADA — © 2006

TYPES OF PIPE BEDDING AND PIPE ZONE BACKFILL

Approved: Guy Boston, P.Eng.
Checked:
Date: 79/02/01 | Scale: N.T.S. | Planning & Engineering Department
Drawing Number: No. 10

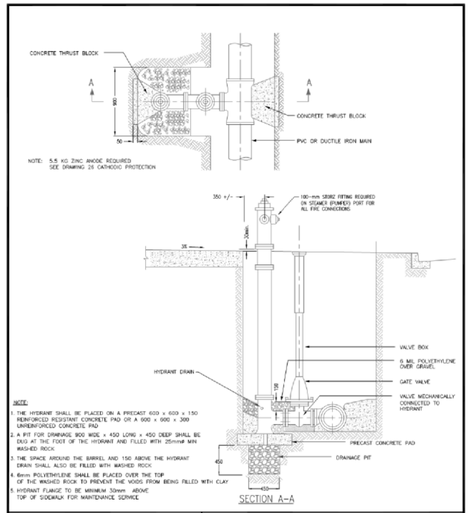

NOTE:
1. THE HYDRANT SHALL BE PLACED ON A PRECAST 600 x 600 x 150 REINFORCED RESISTANT CONCRETE PAD OR A 600 x 600 x 300 UNREINFORCED CONCRETE PAD
2. A PIT FOR DRAINAGE 900 WIDE x 450 LONG x 450 DEEP SHALL BE DUG AT THE FOOT OF THE HYDRANT AND FILLED WITH 25mmØ MIN WASHED ROCK
3. THE SPACE AROUND THE BARREL AND 150 ABOVE THE HYDRANT DRAIN SHALL ALSO BE FILLED WITH WASHED ROCK
4. 6mm POLYETHYLENE SHALL BE PLACED OVER THE TOP OF THE WASHED ROCK TO PREVENT THE WOODS FROM BEING FILLED WITH CLAY
5. HYDRANT FLANGE TO BE MINIMUM 50mm ABOVE TOP OF SIDEWALK FOR MAINTENANCE SERVICE

REVISIONS		
Date	Details	Drawn
04/11/01	100-mm STORZ FITTING REQUIRED	NJB
05/11/24	NOTE: WORDING AMENDMENT	NJB
YY/MM/DD	X	X

THE CITY OF St.Albert — 5 ST. ANNE STREET, ST. ALBERT, Alberta, T8N 3Z9, CANADA — © 2004

TYPICAL HYDRANT CONNECTION & VALVE PLACEMENT

Approved: Guy Boston, P.Eng.
Checked:
Date: 79/02/01 | Scale: N.T.S. | Planning & Engineering Department
Drawing Number: No. 13

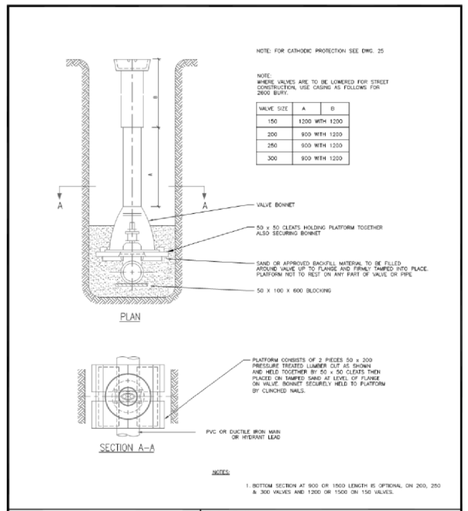

VALVE SIZE	A	B
150	1200 WITH 1200	
200	900 WITH 1200	
250	900 WITH 1200	
300	900 WITH 1200	

NOTES:
1. BOTTOM SECTION AT 900 OR 1500 LENGTH IS OPTIONAL ON 200, 250 & 300 VALVES AND 1200 OR 1500 ON 150 VALVES.

REVISIONS		
Date	Details	Drawn
YY/MM/DD	X	X
YY/MM/DD	X	X
YY/MM/DD	X	X

THE CITY OF St.Albert — 5 ST. ANNE STREET, ST. ALBERT, Alberta, T8N 3Z9, CANADA — © 2004

STANDARD METHOD OF SUPPORTING VALVE CASINGS

Approved: Guy Boston, P.Eng.
Checked:
Date: 79/02/01 | Scale: N.T.S. | Planning & Engineering Department
Drawing Number: No. 12

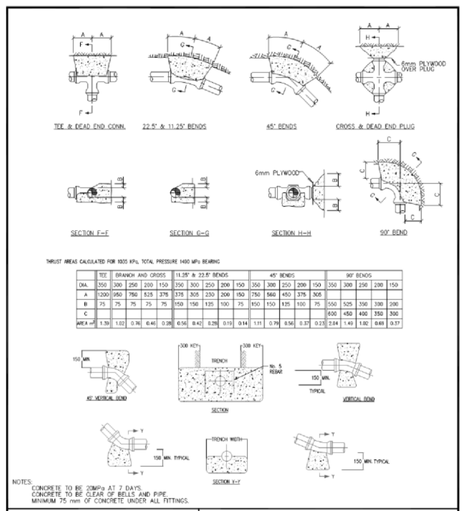

THRUST AREAS CALCULATED FOR 1000 KPa TOTAL PRESSURE 1400 MPa BEARING

	TEE	DEADEND AND CROSS	11.25° & 22.5° BENDS					45° BENDS					90° BENDS				
DIA.	350	300	250	200	150	350	300	250	200	150	350	300	250	200	150	350	300	250	200	150
A	1300	1050	750	525	375	375	305	250	200	150	750	560	450	375	305					
B	75	75	75	75	75	150	150	125	100	75	150	150	125	100	75	550	525	350	300	200
C																650	450	400	350	300
AREA m^2	1.39	1.02	0.76	0.40	0.28	0.56	0.42	0.28	0.19	0.14	1.11	0.79	0.56	0.37	0.23	2.04	1.40	1.02	0.68	0.37

NOTES:
CONCRETE TO BE 20MPa AT 7 DAYS.
CONCRETE TO BE CLEAR OF BELLS AND PIPE.
MINIMUM 75 mm OF CONCRETE UNDER ALL FITTINGS.

REVISIONS		
Date	Details	Drawn
YY/MM/DD	X	X
YY/MM/DD	X	X
YY/MM/DD	X	X

THE CITY OF St.Albert — 5 ST. ANNE STREET, ST. ALBERT, Alberta, T8N 3Z9, CANADA — © 2004

CONCRETE THRUST BLOCK DETAILS FOR WATER MAINS

Approved: Guy Boston, P.Eng.
Checked:
Date: 79/02/01 | Scale: N.T.S. | Planning & Engineering Department
Drawing Number: No. 14

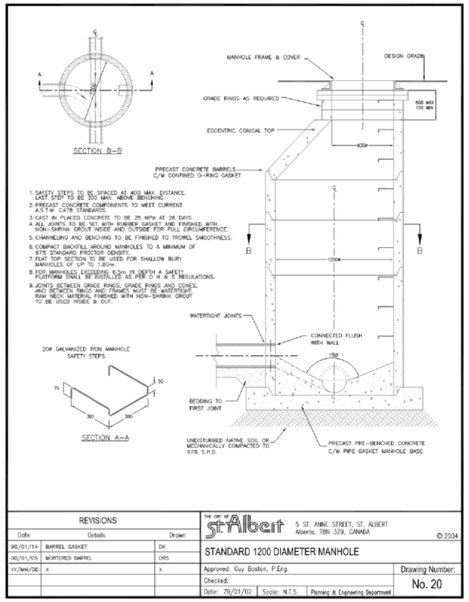

1. SAFETY STEPS TO BE SPACED AT 400 MAX. DISTANCE. LAST STEP TO BE 300 MAX. ABOVE BENCHING.
2. PRECAST CONCRETE COMPONENTS TO MEET CURRENT A.S.T.M. C478 STANDARDS.
3. CAST IN PLACED CONCRETE TO BE 20 MPa AT 28 DAYS.
4. ALL JOINTS TO BE SET WITH RUBBER GASKET AND FINISHED WITH NON-SHRINK GROUT INSIDE AND OUTSIDE FOR FULL CIRCUMFERENCE.
5. CHANNELING AND BENCHING TO BE FINISHED TO TROWEL SMOOTHNESS.
6. COMPACT BACKFILL AROUND MANHOLES TO A MINIMUM OF 97% STANDARD PROCTOR DENSITY.
7. FOR MANHOLES SECTION TO BE USED FOR SHALLOW BURY MANHOLES, TOP TO BE SLAB.
8. FOR MANHOLES EXCEEDING 6.5m IN DEPTH A SAFETY PLATFORM SHALL BE INSTALLED AS PER O H & S REGULATIONS.
9. JOINTS BETWEEN GRADE RINGS, GRADE RINGS AND CONES, AND BETWEEN RINGS AND FRAMES MUST BE WATERTIGHT. RAM NECK MATERIAL FINISHED WITH NON-SHRINK GROUT TO BE VOIDED INSIDE & OUT.

REVISIONS		
Date	Details	Drawn
90/01/14	BARREL GASKET	DK
90/01/05	MORTERED BARREL	DRS
YY/MM/DD	X	X

THE CITY OF St.Albert — 5 ST. ANNE STREET, ST. ALBERT, Alberta, T8N 3Z9, CANADA — © 2004

STANDARD 1200 DIAMETER MANHOLE

Approved: Guy Boston, P.Eng.
Checked:
Date: 79/01/02 | Scale: N.T.S. | Planning & Engineering Department
Drawing Number: No. 20

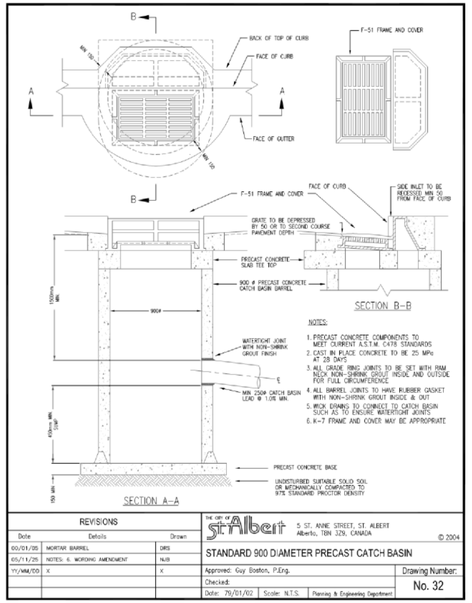

NOTES:
1. PRECAST CONCRETE COMPONENTS TO MEET CURRENT A.S.T.M. C478 STANDARDS
2. CAST IN PLACE CONCRETE TO BE 25 MPa AT 28 DAYS
3. ALL GRADE RING JOINTS TO BE SET WITH RAM NECK NON-SHRINK GROUT INSIDE AND OUTSIDE FOR FULL CIRCUMFERENCE.
4. ALL BARREL JOINTS TO HAVE RUBBER GASKET WITH NON-SHRINK GROUT INSIDE & OUT
5. WICK DRAINS TO CONNECT TO CATCH BASIN SUCH AS TO ENSURE WATERTIGHT JOINTS
6. K-7 FRAME AND COVER MAY BE APPROPRIATE

REVISIONS		
Date	Details	Drawn
00/09/05	MORTAR BARREL	DRS
05/11/25	NOTES: 6. WORDING AMENDMENT	NJB
YY/MM/DD	X	X

THE CITY OF St.Albert — 5 ST. ANNE STREET, ST. ALBERT, Alberta, T8N 3Z9, CANADA — © 2004

STANDARD 900 DIAMETER PRECAST CATCH BASIN

Approved: Guy Boston, P.Eng.
Checked:
Date: 79/01/02 | Scale: N.T.S. | Planning & Engineering Department
Drawing Number: No. 32

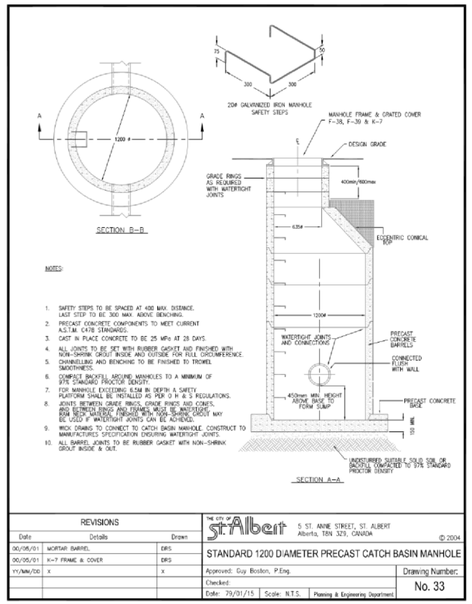

NOTES:
1. SAFETY STEPS TO BE SPACED AT 400 MAX. DISTANCE. LAST STEP TO BE 300 MAX. ABOVE BENCHING
2. PRECAST CONCRETE COMPONENTS TO MEET CURRENT A.S.T.M. C478 STANDARDS.
3. CAST IN PLACE CONCRETE TO BE 25 MPa AT 28 DAYS.
4. ALL JOINTS TO BE SET WITH RUBBER GASKET AND FINISHED WITH NON-SHRINK GROUT INSIDE AND OUTSIDE FOR FULL CIRCUMFERENCE.
5. CHANNELING AND BENCHING TO BE FINISHED TO TROWEL SMOOTHNESS.
6. COMPACT BACKFILL AROUND MANHOLES TO A MINIMUM OF 97% STANDARD PROCTOR DENSITY.
7. FOR MANHOLE EXCEEDING 6.5M IN DEPTH A SAFETY PLATFORM SHALL BE INSTALLED AS PER O H & S REGULATIONS.
8. JOINTS BETWEEN GRADE RINGS, GRADE RINGS AND CONES, AND BETWEEN RINGS AND FRAMES MUST BE WATERTIGHT. RAM NECK MATERIAL FINISHED WITH NON-SHRINK GROUT MAY BE USED IF WATERTIGHT JOINTS CAN BE ACHIEVED.
9. WICK DRAINS TO CONNECT TO CATCH BASIN MANHOLE. CONTRACT TO MANUFACTURES SPECIFICATION ENSURING WATERTIGHT JOINTS.
10. ALL BARREL JOINTS TO BE RUBBER GASKET WITH NON-SHRINK GROUT INSIDE & OUT.

REVISIONS		
Date	Details	Drawn
00/06/01	MORTAR BARREL	DRS
00/06/01	K-7 FRAME & COVER	DRS
YY/MM/DD	X	X

THE CITY OF St.Albert — 5 ST. ANNE STREET, ST. ALBERT, Alberta, T8N 3Z9, CANADA — © 2004

STANDARD 1200 DIAMETER PRECAST CATCH BASIN MANHOLE

Approved: Guy Boston, P.Eng.
Checked:
Date: 79/01/15 | Scale: N.T.S. | Planning & Engineering Department
Drawing Number: No. 33

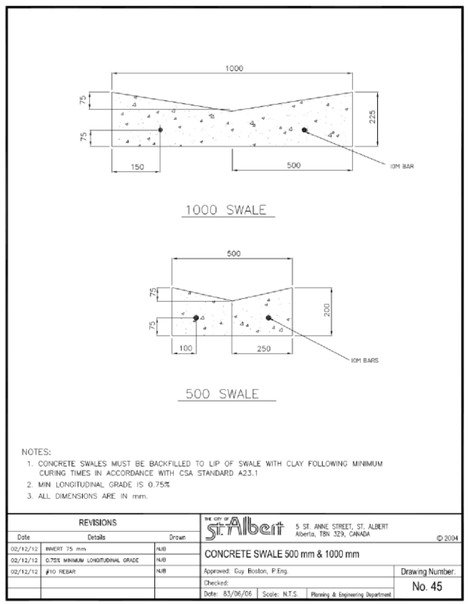

NOTES:
1. CONCRETE SWALES MUST BE BACKFILLED TO LIP OF SWALE WITH CLAY FOLLOWING MINIMUM CURING TIMES IN ACCORDANCE WITH CSA STANDARD A23.1
2. MIN LONGITUDINAL GRADE IS 0.75%
3. ALL DIMENSIONS ARE IN mm.

REVISIONS		
Date	Details	Drawn
02/12/12	INVERT 75 mm	NJB
02/12/12	0.75% MINIMUM LONGITUDINAL GRADE	NJB
02/12/12	#10 REBAR	NJB

THE CITY OF St.Albert — 5 ST. ANNE STREET, ST. ALBERT, Alberta, T8N 3Z9, CANADA — © 2004

CONCRETE SWALE 500 mm & 1000 mm

Approved: Guy Boston, P.Eng.
Checked:
Date: 83/06/08 | Scale: N.T.S. | Planning & Engineering Department
Drawing Number: No. 45

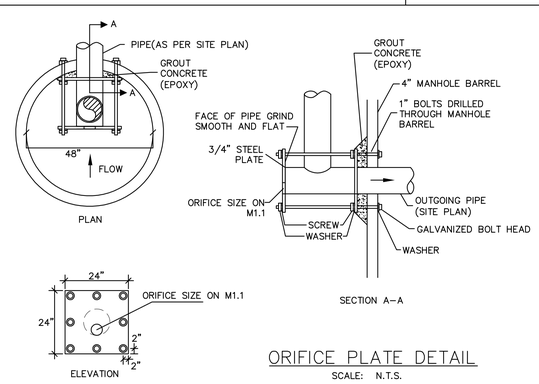

ORIFICE PLATE DETAIL
SCALE: N.T.S.

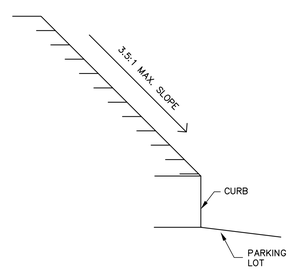

TYPICAL BERM DETAIL
SCALE: N.T.S.

TWS Engineering Ltd.
9918 - 75 AVENUE
EDMONTON, AB. T6E 1J2
Phone: (780) 468-5477
Fax: (780) 465-5368
office@twsengineering.com
www.twsengineering.com

PROFESSIONAL ENGINEER — L. KHUDYAKOV — PLRM # 06983

13	OCT 09/12	ISSUED FOR TENDER	
12	SEP 27/12	REVISED FOR CITY OF ST. ALBERT	
11	SEP 24/12	ISSUED FOR CONSTRUCTION	
10	AUG 16/12	REVISED ENTRANCE-FOR REVIEW	
09	JULY 26/12	REVISED ENTRANCE	
08	JULY 11/12	REISSUED FOR CITY REVIEW	
07	JULY 10/12	FOR CITY REVIEW	
06	JULY 05/12	FOR REVIEW	
05	JULY 03/12	FOR REVIEW	
04	JUNE 20/12	FOR 90% REVIEW	
03	JUNE 18/12	REVISED GRADES(SOUTH FOUNDATION/RETAINING WALL)	
02	JUNE 7/12	FOR BUILDING PERMIT	
01	JUNE 1/12	FOR REVIEW	
NO.	DATE	REVISIONS	

SEAL

APPROVED	DRAWN BY: L.J.K.	DRAWN: J.C.
SCALE: AS SHOWN	DATE: OCT 15/12	

PROJECT
ST. ALBERT COMMERCIAL SITE

TITLE
SITE PLAN DETAILS

PROJECT NUMBER: 12-1665-001CM
REV 10

DRAWING NUMBER: M1.3