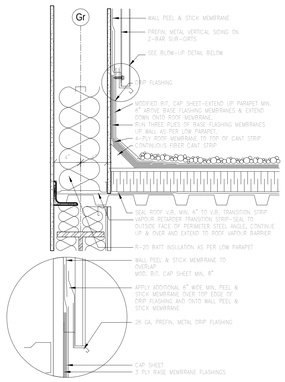

12 SECTION DETAIL @ PARAPET BASE
1 1/2" = 1'-0"

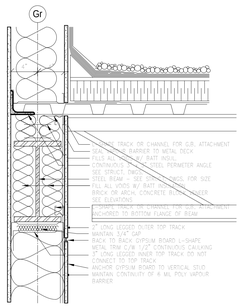

11 SECTION DETAIL @ TOP OF WALL
1 1/2" = 1'-0"

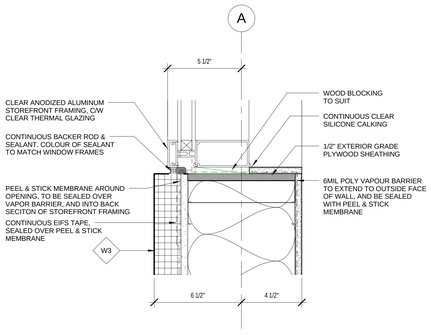

10 WINDOW JAMB DETAIL
3" = 1'-0"

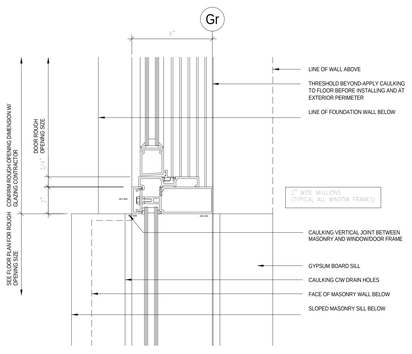

9 ALUMINUM ENTRANCE JAMB DETAIL
3" = 1'-0"

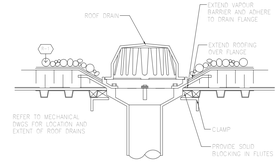

8 ROOF DRAIN
1" = 1'-0"

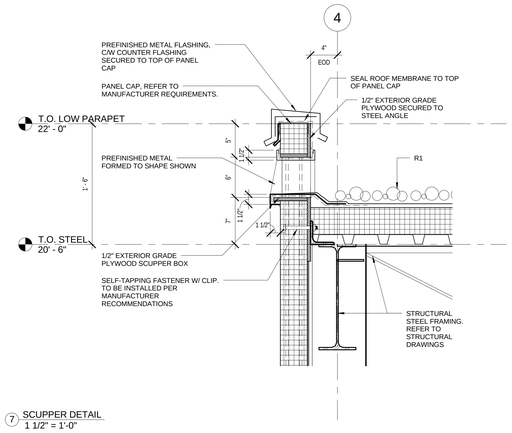

7 SCUPPER DETAIL
1 1/2" = 1'-0"

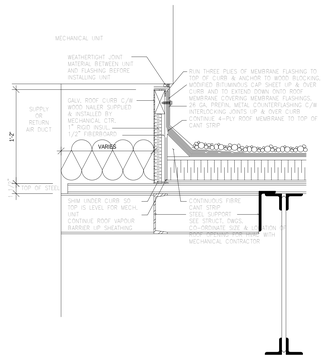

6 HVAC CURB
1 1/2" = 1'-0"

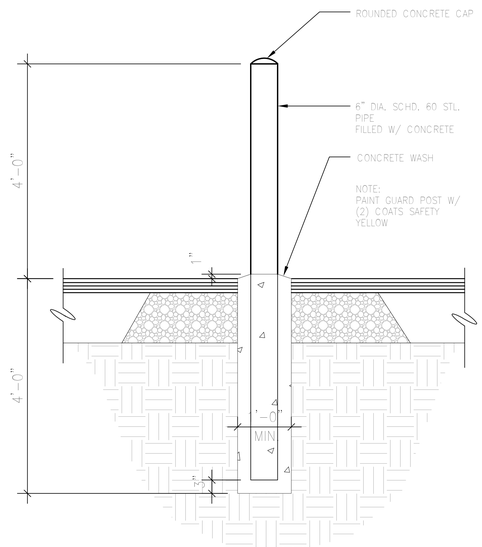

5 BOLLARD DETAIL
1" = 1'-0"

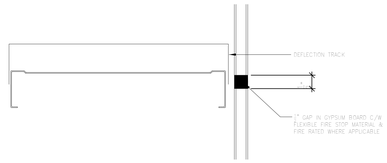

4 DEFLECTION TRACK DETAIL
6" = 1'-0"

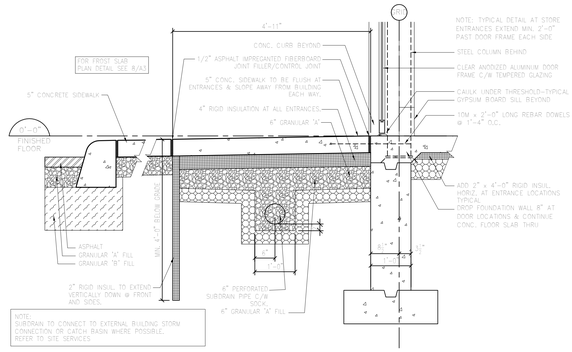

3 FROST SLAB SECTION
3/4" = 1'-0"

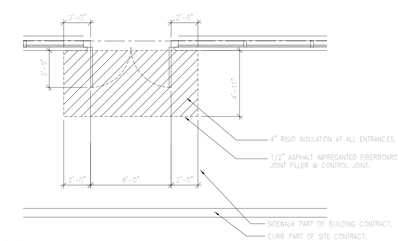

2 FROST SLAB PLAN
1/4" = 1'-0"

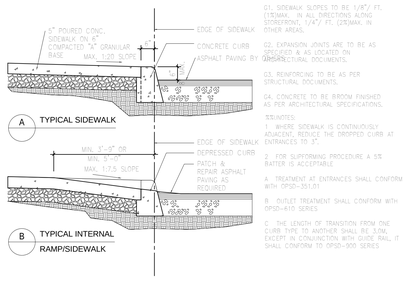

GENERAL NOTES:

G1. SIDEWALK SLOPES TO BE 1/8"/ FT. (1%)MAX. IN ALL DIRECTIONS ALONG STOREFRONT, 1/4"/ FT. (2%)MAX. IN OTHER AREAS.

G2. EXPANSION JOINTS ARE TO BE AS SPECIFIED & AS LOCATED ON ARCHITECTURAL DOCUMENTS.

G3. REINFORCING TO BE AS PER STRUCTURAL DOCUMENTS.

G4. CONCRETE TO BE BROOM FINISHED AS PER ARCHITECTURAL SPECIFICATIONS.

TRANSITIONS:

1 - WHERE SIDEWALK IS CONTINUOUSLY ADJACENT, REDUCE THE DROPPED CURB AT ENTRANCES TO 3".

2 - FOR SUPERFORMING PROCEDURE A 5% BATTER IS ACCEPTABLE

A - TREATMENT AT ENTRANCES SHALL CONFORM WITH OPSD-351.01

B - OUTLET TREATMENT SHALL CONFORM WITH OPSD-610 SERIES.

C - THE LENGTH OF TRANSITION FROM ONE CURB TYPE TO ANOTHER SHALL BE 3.0M, EXCEPT IN CONJUNCTION WITH GUIDE RAIL, IT SHALL CONFORM TO OPSD-900 SERIES

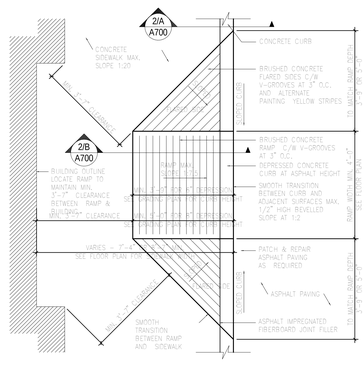

1 HANDICAP CURB DEPRESSION
1/2" = 1'-0"

The drawing, as an instrument of service, is provided by and is the property of Turner Fleischer Architects Inc. The contractor must verify and accept responsibility for all dimensions and conditions on site before commencing work. Do not scale the drawing. Any variations from the supplied information. This drawing is not to be scaled. The architect is not responsible for the accuracy of survey, structural, mechanical, electrical or other consultant's drawings. Refer to the structural, mechanical, consultant's drawings before proceeding with the work. Construction must conform to all applicable codes and requirements of authorities having jurisdiction. The contractor working from drawings not specifically marked 'For Construction' must assume full responsibility and bear costs for any corrections or damages resulting from his work.

Issue	Rev.	Date	Issue / Revision:	By
1		AUG 19/10	ISSUED FOR PERMIT	JM

TURNER FLEISCHER
TURNER FLEISCHER ARCHITECTS INC.
67 Lesmill Road Toronto ON Canada M3B 2T8
Telephone (416) 425-1555 Facsimile (416) 425-8757
turnerfleischer.com

Project :
FAITHFULL AVENUE
SASKATOON, SASKATCHEWAN

Drawing Name :
TYPICAL DETAILS

Proj no. :	09.166	Date :	
Drawn by :	JM	Scale :	As indicated
Checked by :	Checker	Drawing No :	A700

F:\proj\09166\09166-15 WORT\09166 - Cambie - BldgA.rvt