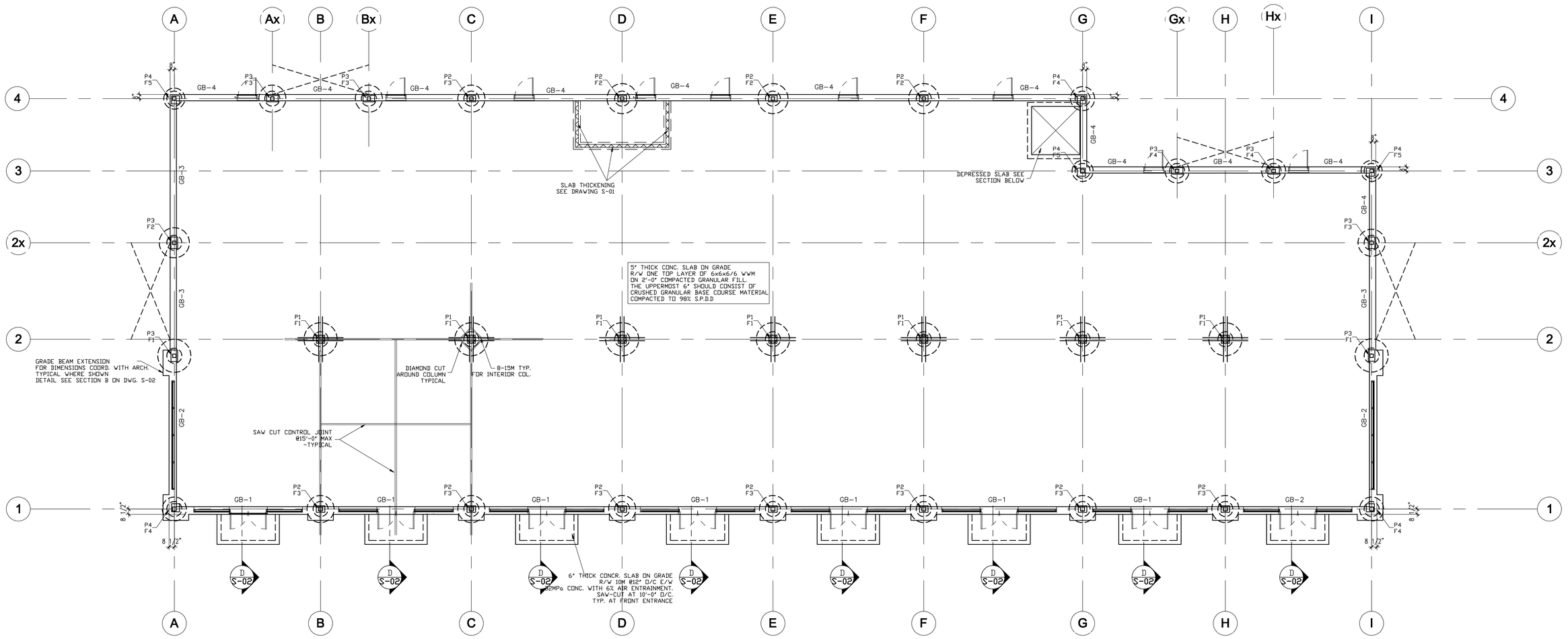

FOUNDATION PLAN NOTES:

01. SEE GEOTECHNICAL REPORT BY "P. MACHIBRODA ENGINEERING LTD." REPORT No S10-7420 DATED JULY 20, 2010.

02. BELLED CAISSONS SHOULD BE PLACES A MINIMUM TWICE DIAMETER INTO UNDISTURBED SOIL AND MINIMUM 23'-0" BELOW FINISH GRADES, WITH BEARING PRESSURE 350 kPa AT SLS & FACTORED BEARING RESISTANCE 875 kPa AT ULS

03. SOIL AT THE UNDERSIDE OF THE FOOTING IS TO BE INSPECTED AND APPROVED BY SOIL CONSULTANT PRIOR TO PLACING CONCRETE.

04. ALL REINFORCING STEEL TO BE DEFORMED BARS TO CONFORM TO CSA G3018-M1992 WITH MIN. Fy=400 MPa U/N. STIRRUPS AND TIES TO BE DEFORMED BARS TO CONFORM TO CSA G3018 WITH MIN. Fy=350 MPa.

05. ALL U/S OF FOOTING & GRADE BEAMS TO BE A MIN. OF 6'-7" BELOW FINISHED GRADE OR SEE DWG. FOR DETAIL.

06. THE LINE OF SLOP BETWEEN ADJACENT FOOTING IS TO BE A MAX. OF 7 IN 10, STEPS TO BE 2'-0" MAX.

07. ALL SLAB ON GRADE SHOULD BE CONSTRUCTED ON COMPACTED GRANULAR MATERIAL PLACED ON SUBGRADE PREPAIRED AS PER SOIL CONSULTANT RECOMMENDATIONS & APPROVED BY SOIL CONSULTANT.

08. CONCRETE SLAB ON GRADE SEE PLAN FOR DETAILS.

09. CONCRETE COMPRESSIVE STRENGTH FOR FOOTINGS TO BE 20 MPa & GRADE BEAMS TO BE 25 MPa. F2 EXPOSURE AT 28 DAYS.

10. CONCRETE COMPRESSIVE STRENGTH FOR ALL SLAB ON GRADE TO BE 25 MPa AT 28 DAYS.

11. ALL CONCRETE WORK SHALL CONFORM TO CAN/CSA-A23.3-04 AND CAN/CSA-A23.2-04.

12. THIS DRAWING TO BE READ IN CONJUNCTION WITH THE RELEVANT ARCHITECTURAL DRAWINGS.

13. CONCRETE CONTRACTOR TO SET ALL LOOSE MEMBERS THAT ARE TO BE EMBEDDED IN THE CONCRETE. SEE STRUCTURAL, ARCHITECTURAL AND MECHANICAL DRAWINGS.

14. FORMWORK CONTRACTOR TO FORM ALL HOLES, CHASES etc. AND TO SET INSERTS, ANCHOR BOLTS AND OTHER EMBEDDED MEMBERS ARE REQUIRED TO BE HELD IN PLACE BY THE FORMWORK BEFORE POURING THE CONCRETE. SEE STRUCTURAL, ARCHITECTURAL AND MECHANICAL DRAWINGS FOR LOCATION.

15. REINFORCING BARS IN FOOTINGS AND SLABS ON EARTH AND CONCRETE MEMBERS EXPOSED FOR ARCHITECTURAL REASONS TO WEATHER, SHALL BE SUPPORTED IN DESIGNATED POSITION BY MEANS OF PRECAST CONCRETE SUPPORTS OR EQUIPMENT.

16. ALL POURED CONCRETE TO BE VIBRATED THOROUGHLY.

17. PROVIDE CONTROL JOINT AT OUTSIDE FACE OF FOUNDATION WALL AT 30'-0" O/C (TYPICAL U/N).

18. CENTER LINE OF COLUMN SHOULD BE AT CENTER OF FOOTING (TYPICAL U/N).

19. CONTRACTOR SHOULD CHECK THE EXIST. ENGINEERING COMMUNICATIONS BEFORE SUBMIT THE PRICE.

BACKFILL

01. SLABS ON GRADE ON ALL STRUCTURAL ELEMENTS FRAMED INTO THE WALLS, WHICH ARE RETAINING EARTH, MUST BE IN PLACE BEFORE BACKFILLING.

02. AT GRADE WALL CONDITIONS BACKFILL EACH SIDE OF WALL SIMULTANEOUSLY.

THIS DRAWING, AS AN INSTRUMENT OF SERVICE, IS PROVIDED BY AND IS THE PROPERTY OF LEONARD KALISHENKO & ASSOCIATES.
THE CONTRACTOR MUST VERIFY AND ACCEPT RESPONSIBILITY FOR ALL DIMENSIONS AND CONDITIONS ON SITE AND MUST NOTIFY LEONARD KALISHENKO AND ASSOCIATES OF ANY VARIATIONS FROM THE SUPPLIED INFORMATION.
THIS DRAWING IS NOT TO BE SCALED.
THE ENGINEER IS NOT RESPONSIBLE FOR THE ACCURACY OF SURVEY, ARCHITECTURAL, MECHANICAL, ELECTRICAL ETC. INFORMATION SHOWN ON THIS DRAWING.
REFER TO THE APPROPRIATE CONSULTANT'S DRAWINGS BEFORE PROCEEDING WITH THE WORK.
CONSTRUCTION MUST CONFORM TO ALL APPLICABLE CODES AND REQUIREMENTS OF AUTHORITIES HAVING JURISDICTION.
THE CONTRACTOR WORKING FROM DRAWINGS NOT SPECIFICALLY MARKED "FOR CONSTRUCTION" MUST ASSUME FULL RESPONSIBILITY AND BEAR COSTS FOR ANY CORRECTIONS OR DAMAGES RESULTING FROM HIS WORK.

NO.	DATE	ISSUED	BY
1.	AUG.19.10	FOR PERMIT	L.K.

PIER SCHEDULE

DATA \ MARK		P1	P2	P3	P4
CONCRETE PIERS	SIZE	16"X16"	17"x13"	23"x13"	16"x16" CORNER SEE DETAIL 1 ON DWG. S-03
	REINF. VERT.	8-15M	8-15M	10-15M	8-15M
	REINF. TIES	10M @ 12"O/C	10M @ 12"O/C	10M @ 12"O/C	10M @ 12"O/C

NOTE : FOR BASE PLATES AND ANCHOR BOLTS SEE COLUMN SCHEDULE ON DWG. S-03

FOOTING SCHEDULE

DATA \ MARK		F1		F2		F3		F4		F5	
		SHAFT	BELL	SHAFT	BELL	SHAFT	BELL	SHAFT	BELL	SHAFT	BELL
CONCRETE FOOTINGS	SIZE	2'-6"DIA.	5'-6"DIA.	2'-6"DIA.	5'-0"DIA.	2'-6"DIA.	4'-6"DIA.	2'-6"DIA.	4'-0"DIA.	2'-6"DIA.	3'-6"DIA.
	BELL HEIGHT	4'-0" MIN.		3'-6" MIN.		3'-0" MIN.		2'-6" MIN.		2'-0" MIN.	
	REINF. VERT.	15M@8" O/C 8'-0" LG.		15M@8" O/C 8'-0" LG.		15M@8" O/C 8'-0" LG.		15M@8" O/C 8'-0" LG.		15M@8" O/C 8'-0" LG.	
	REINF. TIES	10M@12" O/C		10M@12" O/C		10M@12" O/C		10M@12" O/C		10M@12" O/C	
	CONC. COVER	3"		3"		3"		3"		3"	

NOTES:

1) DOWELS TO MATCH VERT. PIER REINF. (TYP.)

2) DOWELS 8-15M CONNECT TO SLAB FOR ALL INTERIOR COLUMN LOCATION. SEE DETAIL.

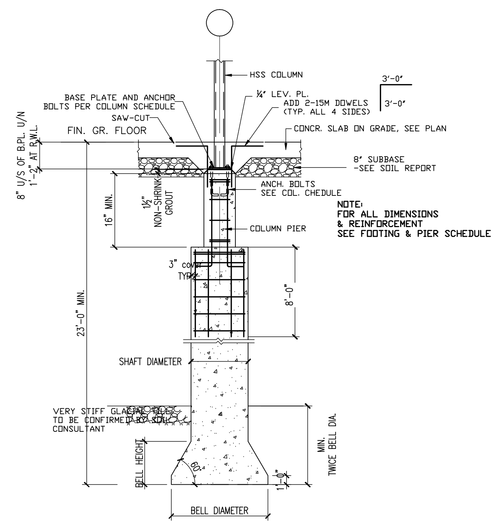

TYPICAL FOOTING DETAIL

GRADE BEAM SCHEDULE

DATA \ MARK		GB-1 CONT.	GB-2 CONT.	GB-3 CONT.	GB-4 CONT.
WIDTH		12"	12"	12"	12"
DEPTH		7'-6"	8'-2"	8'-6"	10'-2"
REINF.	TOP	3-15M	3-15M	3-15M	3-15M
	BOTTOM	4-20M	4-20M	4-20M	3-25M
	SKIN (HOR.)	2x3-15M E.F.	2x3-15M E.F.	2x3-15M E.F.	2x4-15M E.F.
	VERT.	10M @12" O/C STIRR.	10M @12" O/C STIRR.	10M @12" O/C STIRR.	10M @12" O/C STIRR.
DOWELS INTO PIER		3-15M E.F.	3-15M E.F.	3-15M E.F.	3-15M E.F.

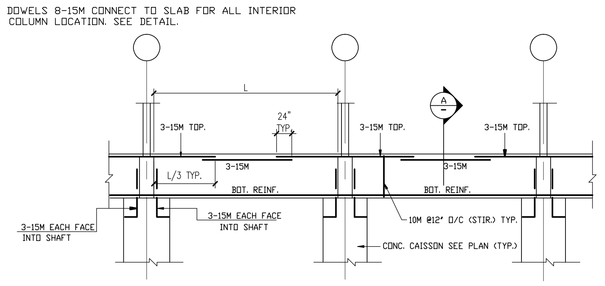

TYPICAL GRADE BEAM REINFORCEMENT

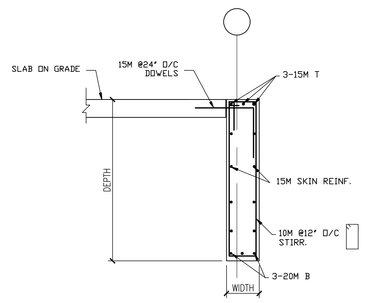

SECTION A

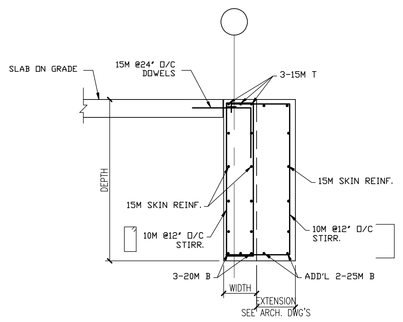

SECTION B

TYP. DETAIL AT DIFFERENT DEPTH OF GRADE BEAM

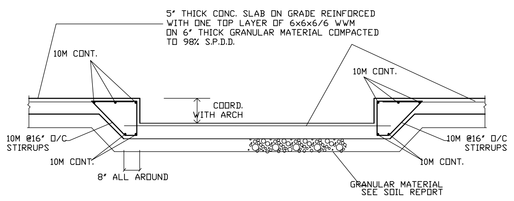

TYP. SECTION THROUGH DEPRESSION SLAB

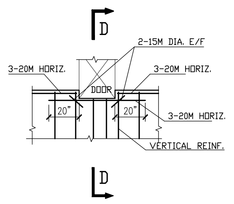

TYPICAL GRADE BEAM DETAIL AT DOOR LOCATION

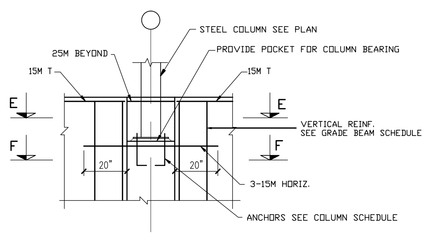

TYPICAL GRADE BEAM DETAIL AT PIER LOCATION

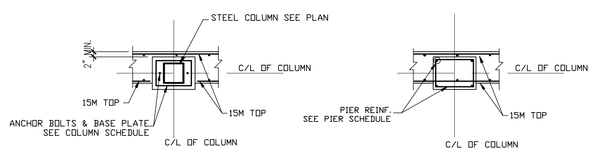

SECTION E

SECTION F

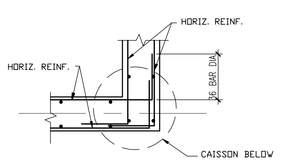

TYPICAL GRADE BEAM END CONNECTION

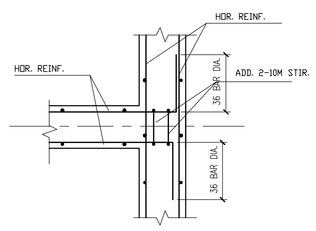

TYPICAL GRADE BEAM MIDDLE CONNECTION

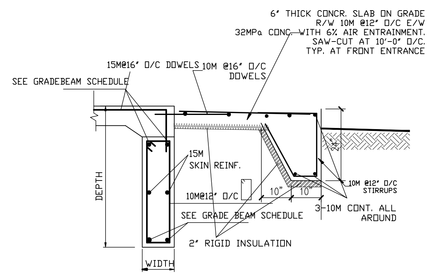

D-D

NO.	DATE	REVISION	BY

LEONARD KALISHENKO & ASSOCIATES LIMITED
STRUCTURAL ENGINEERS
5050 DUFFERIN STR., #240, TORONTO, ONTARIO, M3H 5T5
TEL:(416) 665-7165
FAX:(416) 665-4259

Project: **FAITHFULL AVENUE**
SASKATOON, SASKATCHEWAN

Drawing Title: FOUNDATION PLAN

Drawn by: CHARLIE	Date: AUG/17/2010
Checked by: L.K.	Scale: 1/8"=1'-0"
Project Nr. 10-1856	Drawing Nr. S-02

CAD FILE: \DWG\07000010.DWG
LAST UPDATED: YEAR/MONTH/DAY
ARCH. "E" SIZE 48"x36"

METRIC PRINTING COLOR SETTINGS: 1=0.150, 2=0.200, 3=0.350, 4=0.500, 5=0.050, 6=0.600, 7=0.250, 8=0.150, 9=0.250, 10=-3255=0.130
AVERAGE PRINTING COLOR SETTINGS: 1=0.000, 2=0.000, 3=0.014, 4=0.000, 5=0.014, 6=0.000, 7=0.014, 8=0.000, 9=0.000, 10=-3255=0.000