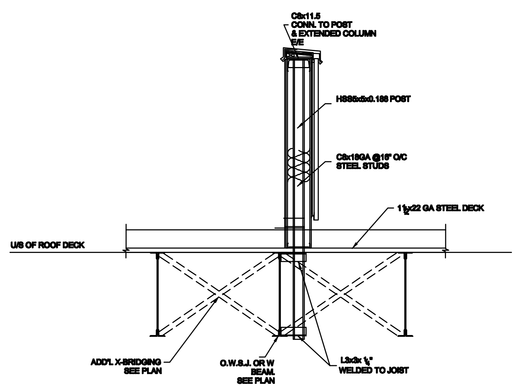

TYPICAL PARAPET RETURN DETAIL

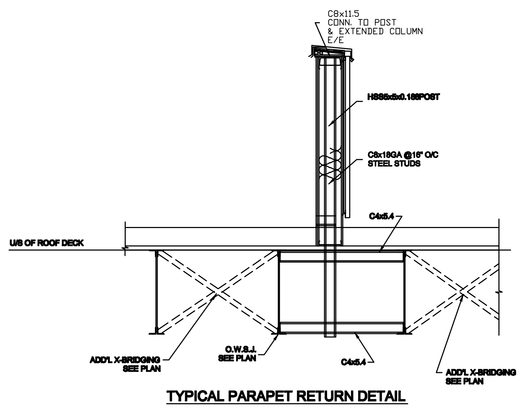

TYPICAL PARAPET RETURN DETAIL

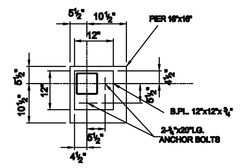

CORNER BASE PLATE DETAIL

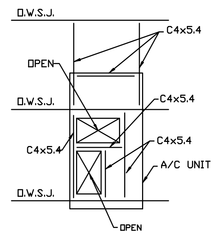

TYPICAL A/C UNIT FRAMING

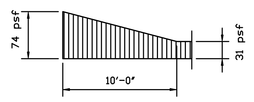

SNOW ACCUMULATION DIAGRAM FOR A/C UNITS

NOTE:
FOR A/C UNITS LOCATION & WEIGHT COORDINATE WITH MECHANICAL DRAWINGS

COLUMN SCHEDULE

MARK / DATA	C1	C2	C3
SIZE SHAPE	HSS8X8X0.250	HSS7X7X0.250	HSS7X7X0.250
BASE PLATE	9"x3/4"X14"	9"x3/4"X13"	8"x3/4"X13"
ANCHOR BOLTS	2-3/4" DIA.x20"LG.	2-3/4" DIA.x20"LG.	2-3/4" DIA.x20"LG.

NOTES :

1. USE STEEL Fy=350 MPa.
2. COLUMN WITH INDEX "A" SHALL HAVE 4 - 3/4" DIA. x24" LG. ANCHOR BOLTS
3. COLUMN WITH MARKED WITH "*" ARE EXTENDED OVER THE ROOF

HIGH BEAM/LOW BEAM SCHEDULE

MARK / DATA	HB1	HB2	LB1	LB2
SIZE SHAPE	HSS8X4X0.188	HSS6X4X0.188	HSS10X6X0.250	HSS6X4X0.188

ROOF FRAMING PLAN NOTES:

01. FOR TOP OF STEEL ELEVATION & SLOPES SEE ARCHITECTURAL DRAWINGS.
02. DESIGN LOADS:
    D=25 PSF
    S=31 PSF + SNOW ACCUMULATION
    TOTAL LOAD FOR JOIST=DL+LL+SNOW ACCUMULATION+POINT LOAD+CONC.PAVER
    TOTAL DEFLECTION UNDER L/360-TYPICAL UN.
03. ALL LOADS IN THIS DRAWING ARE SERVICE LOADS.
04. FOR ALL MECHANICAL EQUIPMENT ALLOW AN ADDITIONAL POINT LOAD ON JOIST ANYWAYWHERE ALONG THE JOIST SPAN.
05. FABRICATION AND ERECTION OF STRUCTURAL STEEL TO CONFIRM TO THE STANDARD CAN/CSA S16.1-01 "LIMIT STATE DESIGN OF STEEL STRUCTURES"
06. WELDING SHALL CONFIRM TO STANDARDS W47.1, W48.1 AND W59.1
07. ALL EXPOSED STEEL TO BE HOT DIP GALVANIZED.
08. BRIDGING, BRACING AND ANCHORAGE TO CONFIRM TO CAN/CSA S16 AND NBC LATEST EDITION AND TO BE DESIGNED BY JOIST SUPPLIER.
09. ALL STRUCTURAL STEEL TO BE 350W AND CONFIRM TO CAN/CSA G40.21
10. PROVIDE 1 1/2"X22GA CANAM L.Z.C. STEEL DECK (TYPICAL) U/N.
    DECK TO BE DESIGNED BY DECK SUPPLIER
    SHOP DRAWINGS STAMPED BY P.ENG OF B.C. TO BE SUBMITTED FOR APPROVAL.
11. ALL JOISTS TO HAVE 4" DEEP SHOES. ALL JOISTS TO WELDED TO SUPPORTING STEEL. SIZE AND SPACING AS SHOWN ON PLAN.
12. ALL JOISTS MARKED "T.J." ARE THE JOISTS TO HAVE DOUBLE ANGLE AT TOP AND BOTTOM CHORD, AND THE BOTTOM CHORD TO BE EXTENDED AND CONNECT TO COLUMNS OR BEAMS.
13. PROVIDE TIE JOIST AS SHOWN ON PLAN.
14. ALL JOISTS AND DECK SHOULD BE DESIGNED BY SUPPLIER TO RESIST UPLIFT PRESSURE DUE TO WIND IN ACCORDANCE WITH NBC STRUCTURAL COMMENTARIES PART 4. DESIGN NET UPLIFT=10PSF. EXCEPT PERIMETER STRIP OF 10'-0" WIDE, WHERE DESIGN NET UPLIFT=15PSF.
15. ALL JOISTS TO SUPPORT SPRINKLER LINES TO BE DESIGNED FOR ADDITIONAL LOAD OF 40 plf ALONG JOIST. COORDINATE WITH FIRE CONSULTANT ALL SPRINKLER LINE CONNECTIONS TO BE AT JOIST TOP CHORD ONLY (AT PANEL POINT).
16. FRAME ALL OPENINGS IN THE ROOF WITH C4X2.4- TYPICAL UN.
17. PROVIDE CONTINUOUS L3X3X1/4" ALL AROUND THE ROOF.
18. H.P. AND L.P. DENOES HIGH AND LOW POINTS.
19. STEEL DECK AT PERIMETER WALLS TO BE AT HIGH POINT.
20. SEE ALSO TYPICAL DETAILS AND NOTES ON DWG S-01.
21. JOIST TO BE DESIGNED ADDITIONAL POINT LOAD 1 KIPS AT THE PARAPET RETURN LOCATION.

METAL STUD NOTES:

01. STUDS SHALL BE AS SHOWN ON DWG. OR TO BE DESIGNED BY STUD SUPPLIER.
02. ERECTION, BRIDGING AND SHEATHING SHALL CONFIRM TO MANUFACTURER'S SPECIFICATIONS.
03. SUBMIT SHOP DRAWINGS PREPARED AND STAMPED BY A REGISTERED PROFESSIONAL ENGINEER FOR REVIEW
04. CONNECTION OF STUDS TO STEEL TO BE DESIGNED BY STUD SUPPLIER
05. ALL CONNECTION SHOULD BE WITHIN THE THICKNESS OF THE WALL.

DESIGN CRITERIA

- LIVE LOAD - SEE ROOF PLAN NOTES.
- DEAD LOAD - SEE ROOF PLAN NOTES.
- SNOW LOAD - SEE ROOF PLAN NOTES.
- WIND LOAD-
  - HOURLY WIND PRESSURE (1/50) q=0.46 kPa
  - Ce, Cg, Cp, hr FACTORS AS PER NBC 2005 REQUIREMENTS.
- STOREY DRIFT: E/W = 1/8343
  N/S = 1/2253

WIND	N/S	E/W
BASE SHEAR (kips)	61.9	21.2
OVERTURNING MOMENT (kip*ft)	1273	437

- SEISMIC LOAD-
  - Sa(0.2) = 0.12; Sa(0.5) = 0.068; Sa(1.0) = 0.023; Sa(2.0) = 0.008; PGA = 0.059
  - Rd = 1.5; Ro = 1.3
  - SITE CLASS "D"
  - Fa = 1.3; Fv = 1.4
  - Ie = 1.0
  - Ta = 0.1562; S(Ta) = 1.56
  - Mv = 1.0
  - TORSIONAL SENSITIVITY: B = 1.230
  - TYPE OF IRREGULARITIES: NONE
  - GOVERNING BASE SHEAR:
    Vmax = (2/3)S(0.2)Mv*IE/(RdRo)=0.0533W
- STOREY DRIFT: E/W = 1/2480
  N/S = 1/2833

SEISMIC	N/S	E/W
BASE SHEAR (kips)	22.1	22.1
OVERTURNING MOMENT (kip*ft)	454	454

- EARTH LATERAL PRESSURE COEFFICIENTS
  - Ka = 0.33,
  - Ko = 0.5,

WEIGHT OF BACKFILL= 21.0 kN/o.M
- BOIL BEARING PRESSURE- SEE FOUNDATION PLAN

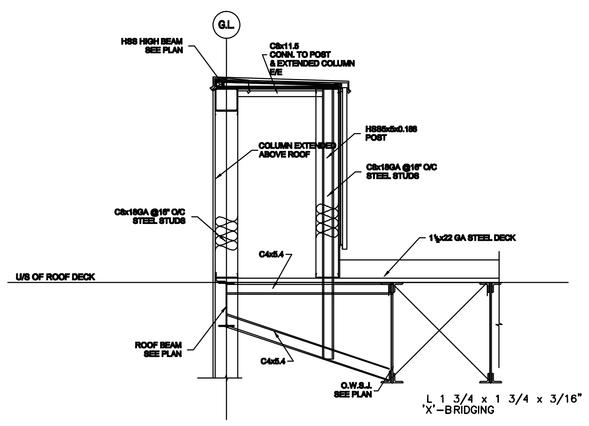

TYPICAL PARAPET RETURN DETAIL

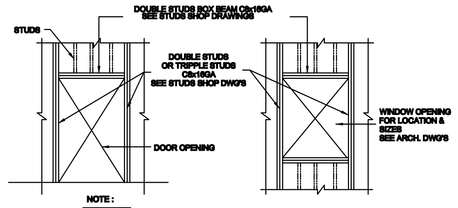

NOTE :
1. PROVIDE 8" MIN. BEARING AT EACH END FOR BRICK SUPPORTING L'S

TYPICAL DOOR OPENING

TYPICAL WINDOW OPENING

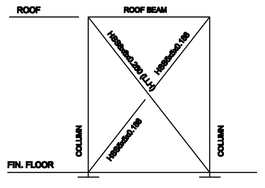

BRACING LOADS:
MAX. TENSION/COMPRESSION = 80 kip
BRACING CONN. FORCE = 75 kip
MAX. OUT OF PLANE = 4 kip SIE

VERTICAL BRACING VB-1

NOTES:

01. ALL LOADS ARE FACTORED SEISMIC LOADS
02. CENTER LINE OF VERTICAL BRACING TO BE AT CENTER LINE OF COLUMNS.

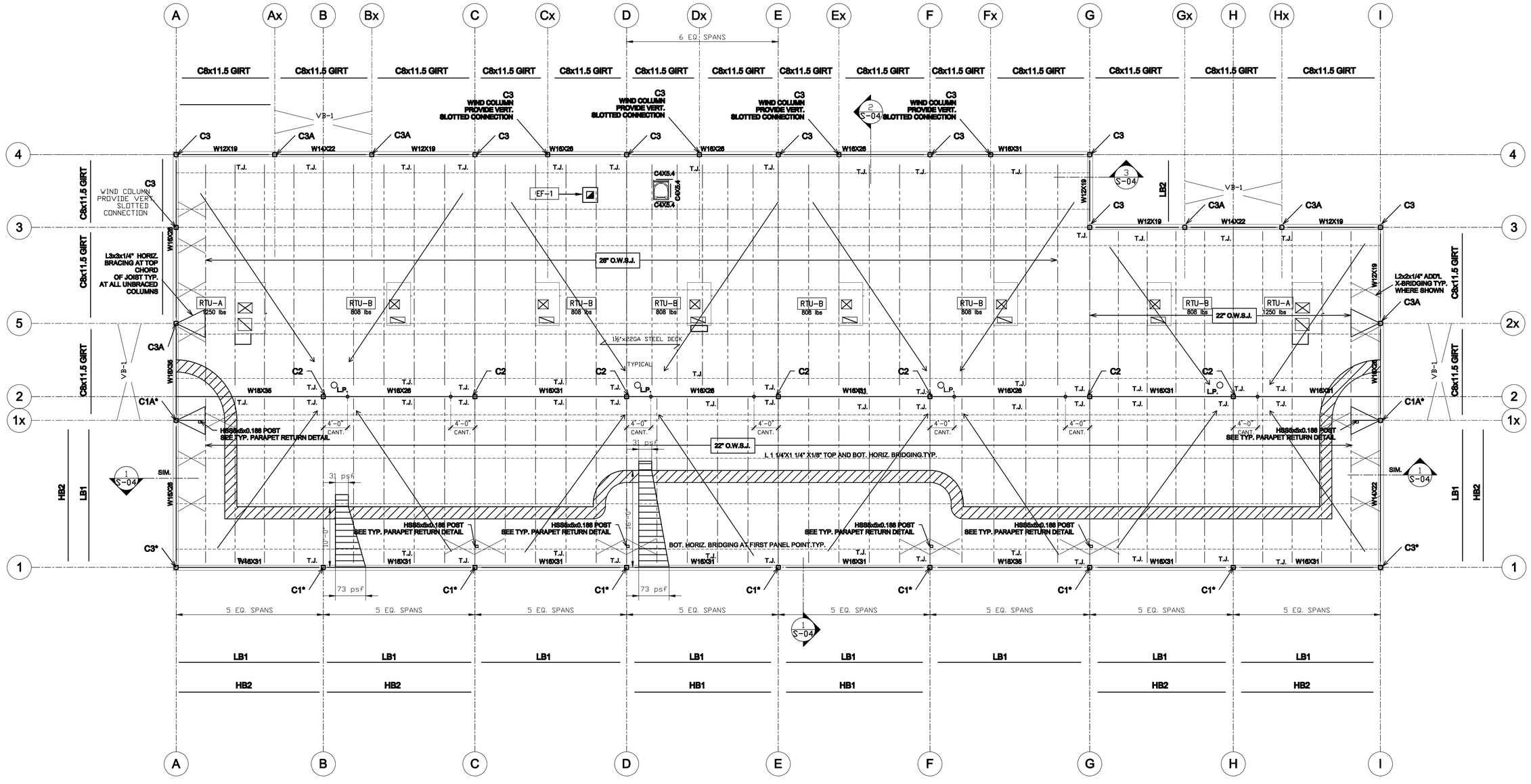

NO.	DATE	ISSUED	BY
1.	AUG.19.10	FOR PERMIT	L.K.

NO.	DATE	REVISION	BY

THIS DRAWING, AS AN INSTRUMENT OF SERVICE, IS PROVIDED BY AND IS THE PROPERTY OF LEONARD KALISHENKO & ASSOCIATES.
THE CONTRACTOR MUST VERIFY AND ACCEPT RESPONSIBILITY FOR ALL DIMENSIONS AND CONDITIONS ON SITE AND MUST NOTIFY LEONARD KALISHENKO AND ASSOCIATES OF ANY VARIATIONS FROM THE SUPPLIED INFORMATION.
THIS DRAWING IS NOT TO BE SCALED.
THE ENGINEER IS NOT RESPONSIBLE FOR THE ACCURACY OF SURVEY, ARCHITECTURAL, MECHANICAL, ELECTRICAL ETC. INFORMATION SHOWN ON THIS DRAWING.
REFER TO THE APPROPRIATE CONSULTANT'S DRAWINGS BEFORE PROCEEDING WITH THE WORK.
CONSTRUCTION MUST CONFORM TO ALL APPLICABLE CODES AND REQUIREMENTS OF AUTHORITIES HAVING JURISDICTION.
THE CONTRACTOR WORKING FROM DRAWINGS NOT SPECIFICALLY MARKED "FOR CONSTRUCTION" MUST ASSUME FULL RESPONSIBILITY AND BEAR COSTS FOR ANY CORRECTIONS OR DAMAGES RESULTING FROM HIS WORK.

LEONARD KALISHENKO
& ASSOCIATES LIMITED
STRUCTURAL ENGINEERS
5050 DUFFERIN STR., #240,
TORONTO, ONTARIO, M3H 5T5
TEL:(416) 665-7165
FAX:(416) 665-4259

Project:
FAITHFULL AVENUE
SASKATOON, SASKATCHEVAN

Drawing Title:
ROOF FRAMING PLAN

Drawn by: L.A.	Date: AUG.18.2010
Checked by: L.K.	Scale: 1/8"=1'-0"
Project Nr. 10-1856	Drawing Nr. S-03

CAD FILE \DWG\
LAST UPDATED: YEAR/MONTH/DAY

ARCH. "C" SIZE 48"x36"

METRIC PRINTING COLOR SETTINGS: 1=0.150, 2=0.250, 3=0.350, 4=0.500, 5=0.350, 6=0.600, 7=0.350, 8=0.150, 9=0.250, 10=255=0.130
NORMAL PRINTING COLOR SETTINGS: 1=0.100, 2=0.200, 3=0.300, 4=0.400, 5=0.300, 6=0.600, 7=0.300, 8=0.100, 9=0.200, 10=255=0.000